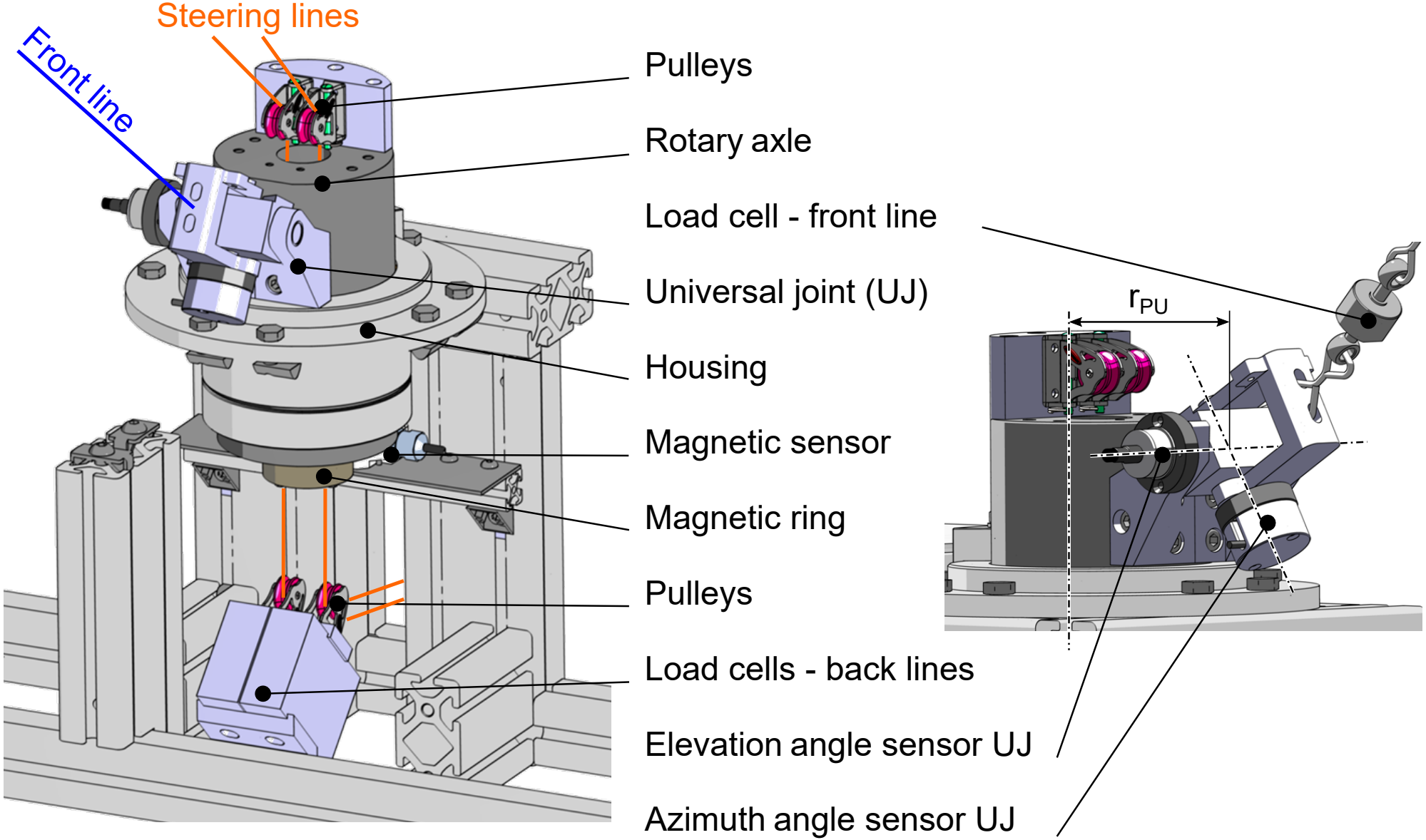
Steering lines
Front line
Pulleys
Rotary axle
Load cell - front line
Universal joint (UJ)
Housing
Magnetic sensor
Magnetic ring
Pulleys
Load cells - back lines
Elevation angle sensor UJ
Azimuth angle sensor UJ
$r_{PU}$